CSc 372

Comparative Programming Languages

23 : Prolog — Negation

Christian Collberg

collberg+372@gmail.com

Department of Computer Science

University of Arizona

The Cut

[2]

Cuts & Negation

The cut (`!`) is is ued to affect Prolog's backtracking. It can be used to

- reduce the search space (save time).
- tell Prolog that a goal is deterministic (has only one solution) (save space).
- construct a (weak form of) negation.
- construct `if_then_else` and `once` predicates.

[3]

Cuts & Negation

- The cut reduces the flexibility of clauses, and destroys their logical structure.
- Use cut as a last resort.
- Reordering clauses can sometimes achieve the desired effect, without the use of the cut.
- If you are convinced that you have to use a cut, try using `if_then_else`, `once`, or `not` instead.

[4]

The Cut

The cut succeeds and commits Prolog to all the choices made since the parent goal was called.

Cut does two things:

commit: Don't consider any later clauses for this goal.

prune: Throw away alternative solutions to the left of the cut.

[5]

The Cut

prune:

Forget alternative solutions

```
p :- a, b, !, c, d.
p :- x, y.
p :- z.
```

commit:

Don’t try these

[6]

The Cut

```
p :- q, !.
p :- r.
q :- s.
q :- t.
s.
```

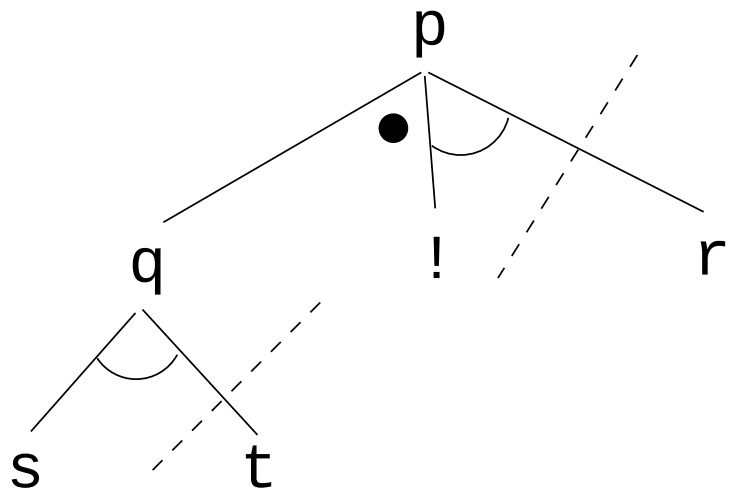

succeed

[7]

The Boxflow Model

[8]

The Boxflow Model

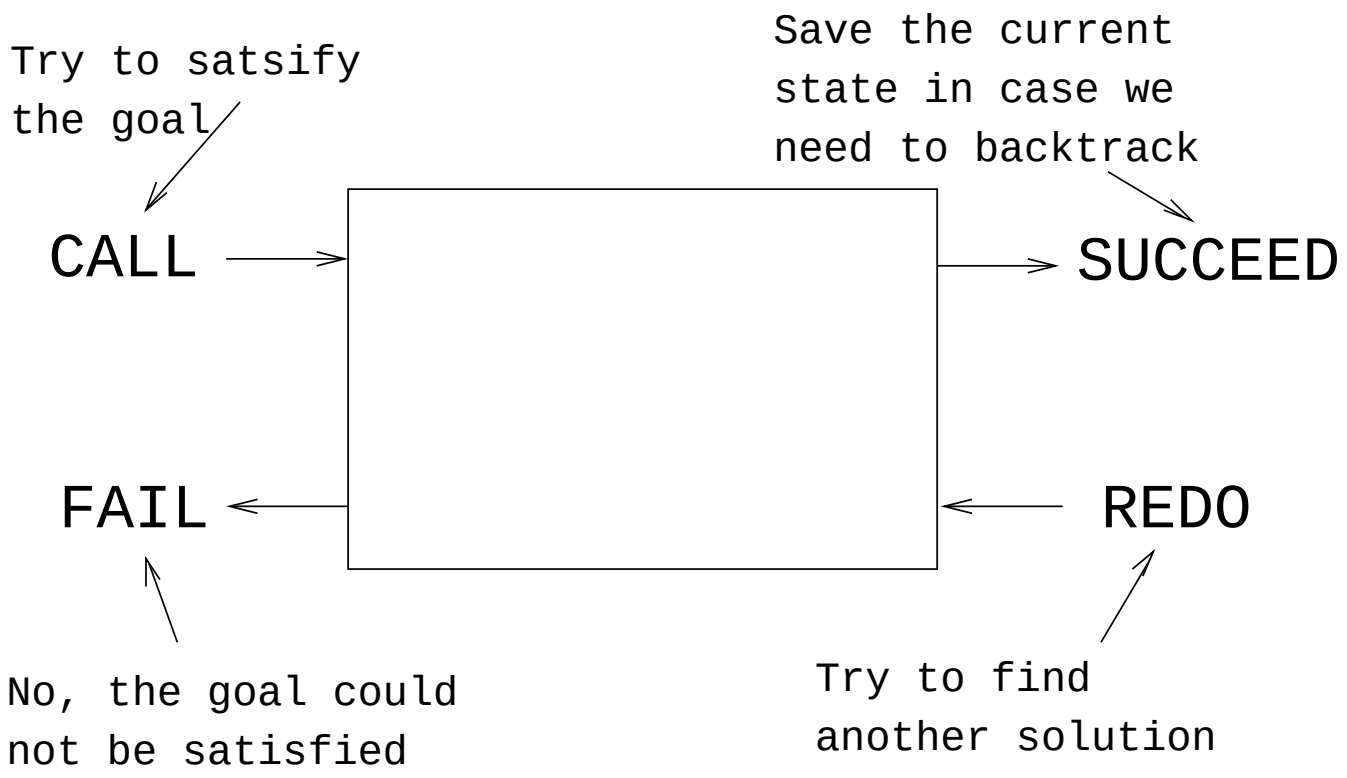

[9]

The Boxflow Model

```
a(X) :- b(X), c(X).
a(X) :- d(X).
```

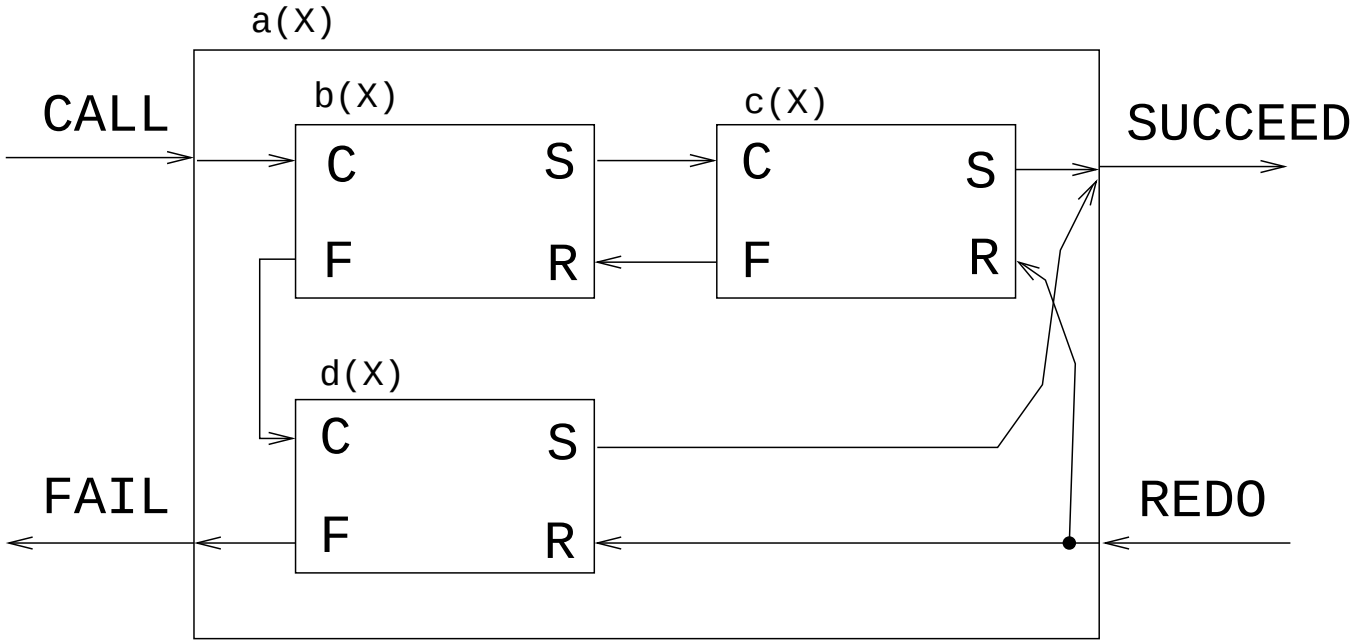

[10]

The Cut

```
a :- b, !, c.
a :- d.
```

```
if b then c
     else d
```

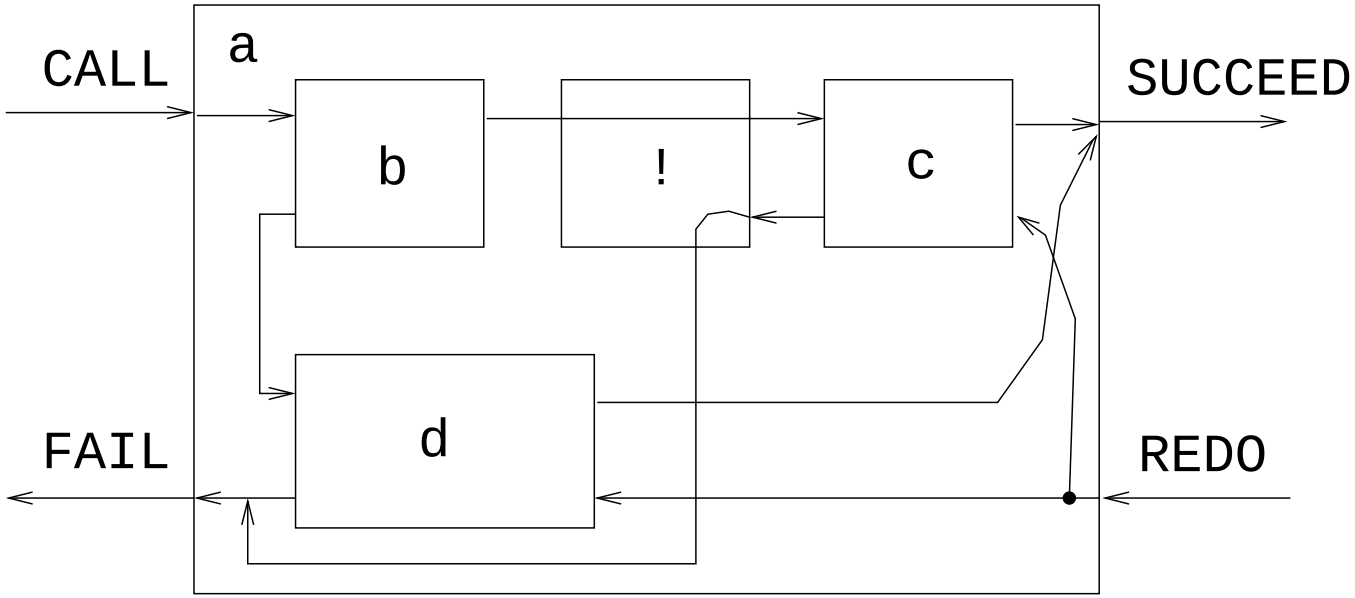

[11]

Classifying Cuts

[12]

Classifying Cuts

grue No effect on logic, improves efficiency.

- **green** Prune away
  - irrelevant proofs
  - proofs which are bound to fail
- **blue** Prune away
  - proofs a smart Prolog implementation would not try, but a dumb one might.

red Remove unwanted logical solutions.

[13]

Green Cuts – Merge

Produce an ordered list of integers from two ordered lists of integers.

```
merge([X|Xs], [Y|Ys], [X|Zs]) :-
    X < Y, merge(Xs, [Y|Ys], Zs).
merge([X|Xs], [Y|Ys], [X,Y|Zs]) :-
    X = Y, merge(Xs, Ys, Zs).
merge([X|Xs], [Y|Ys], [Y|Zs]) :-
    X > Y, merge([X|Xs], Ys, Zs).

merge(Xs, [], Xs).
merge([], Ys, Ys).

?- merge([1,4], [3,7], L).
    L = [1,3,4,7]
```


[14]

Green Cuts – Merge

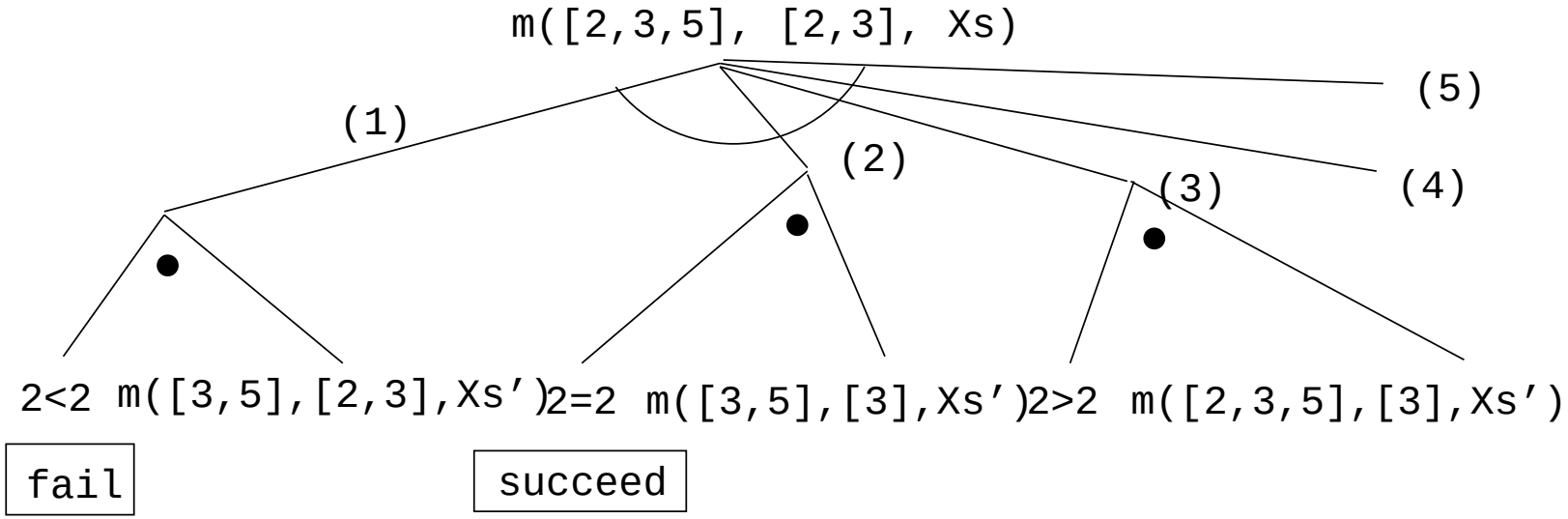

[15]

Green Cuts

- Still, there is no way for Prolog to know that the clauses are mutually exclusive, unless we tell it so. Therefore, Prolog must keep all choice-points (points to which Prolog might backtrack should there be a failure) around, which is a waste of space.
- If we insert cuts after each test we will tell Prolog that the procedure is deterministic, i.e. that once one test succeeds, there is no way any other test can succeed. Prolog therefore does not need to keep any choice-points around.

[16]

Green Cuts – Merge

```
merge([X|Xs], [Y|Ys], [X|Zs]) :-
    X < Y, !,
    merge(Xs, [Y|Ys], Zs).

merge([X|Xs], [Y|Ys], [X,Y|Zs]) :-
    X = Y, !,
    merge(Xs, Ys, Zs).

merge([X|Xs], [Y|Ys], [Y|Zs]) :-
    X > Y, !,
    merge([X|Xs], Ys, Zs).

merge(Xs, [], Xs) :- !.
merge([], Ys, Ys) :- !.
```


[17]

Green Cuts – Merge

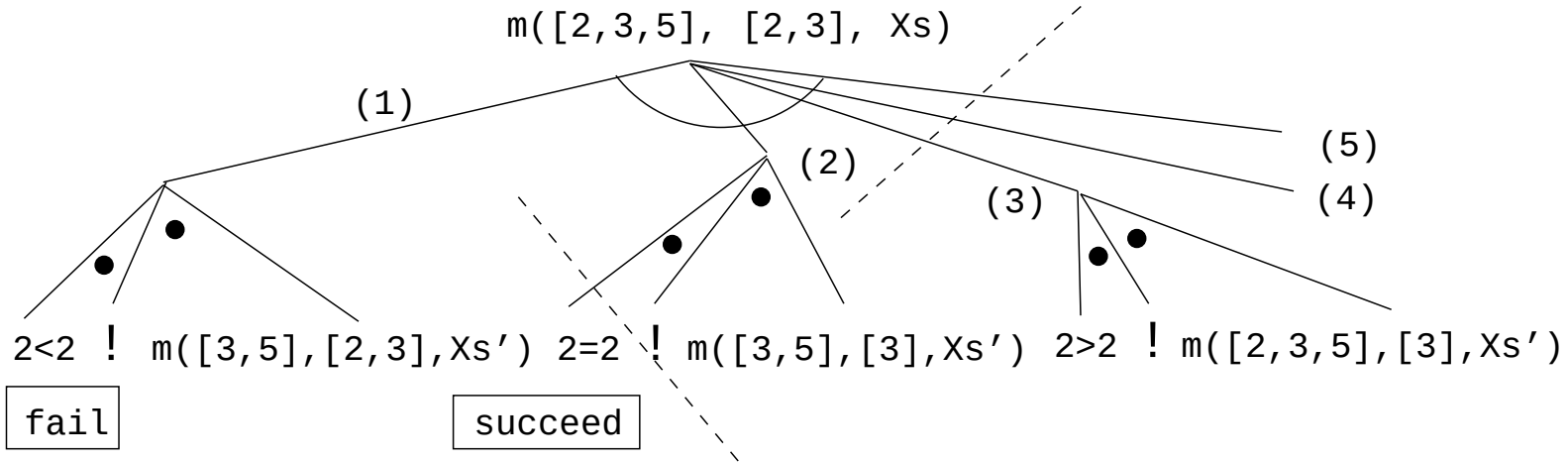

[18]

Red Cuts – Abs

```
abs1(X, X) :- X >= 0.
abs1(X, Y) :- Y is -X.
?- abs1(-6, X).
      X = 6 ;
?- abs1(6, X).
      X = 6 ;
      X = -6 ;

abs2(X, X) :- X >= 0, !.
abs2(X, Y) :- Y is -X.
?- abs2(-6, X).
      X = 6 ;
?- abs2(6, X).
      X = 6 ;
```


[19]

Red Cuts – Abs

```
abs3(X, X) :- X >= 0.
abs3(X, Y) :- X < 0,
              Y is -X.

?- abs3(-6, X).
      X = 6 ;
      no
?- abs3(6, X).
      X = 6 ;
      no
```


[20]

Red Cuts – Intersection

Find the intersection of two lists A & B, i.e. all elements of A which are also in B.

```
intersect([H|T], L, [H|U]) :-
   member(H, L),
   intersect(T, L, U).
intersect([_|T], L, U) :-
   intersect(T, L, U).
intersect(_,_,[]).
```


[21]

Red Cuts – Intersection

```
?- intersect([3,2,1],[1,2], L).
        L = [2,1] ;
        L = [2] ;
        L = [2] ;
        L = [1] ;
        L = [] ;
        L = [] ;
        L = [] ;
        L = [] ;
        no
```


[22]

Red Cuts – Intersection

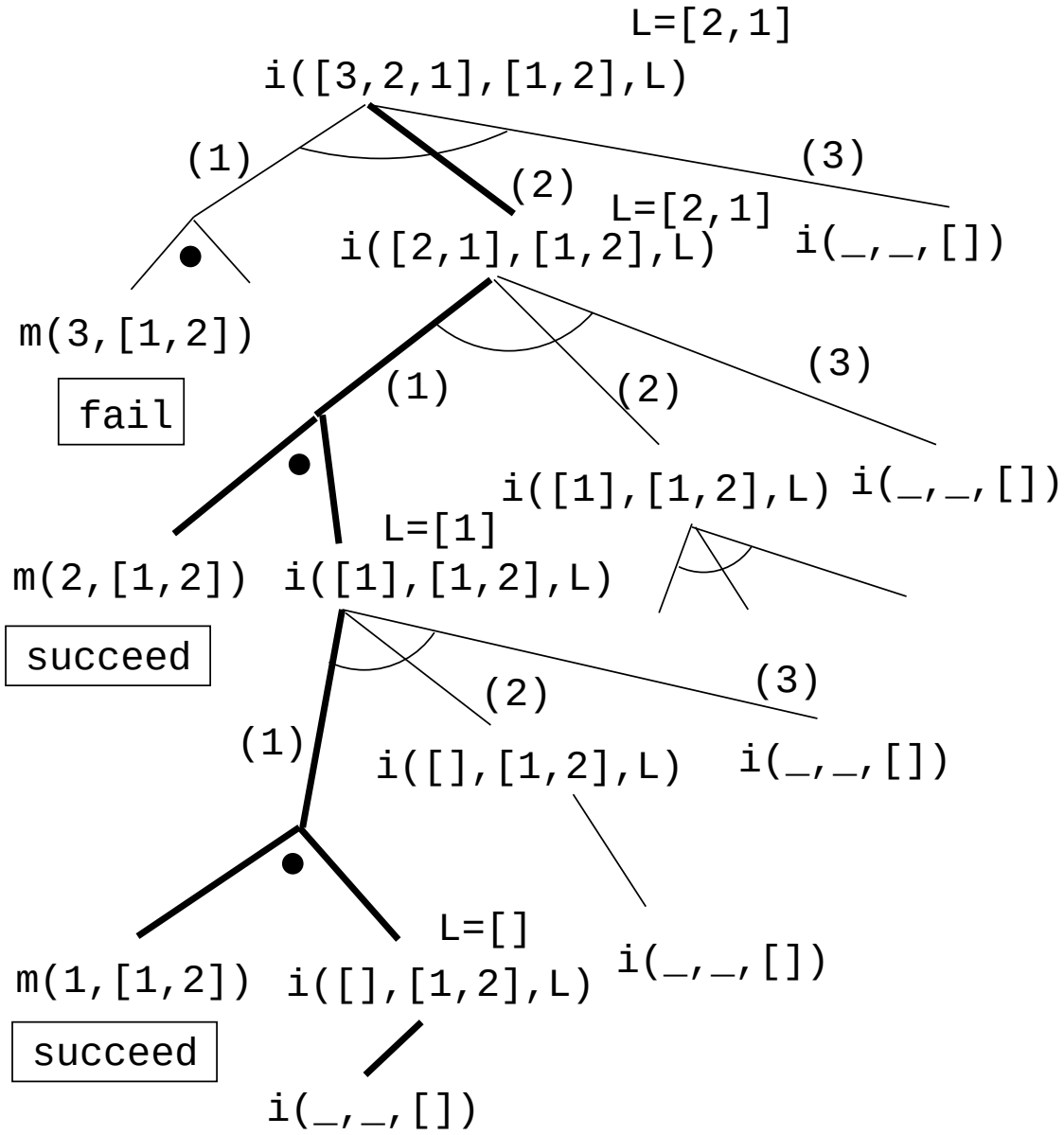

Red Cuts – Intersection

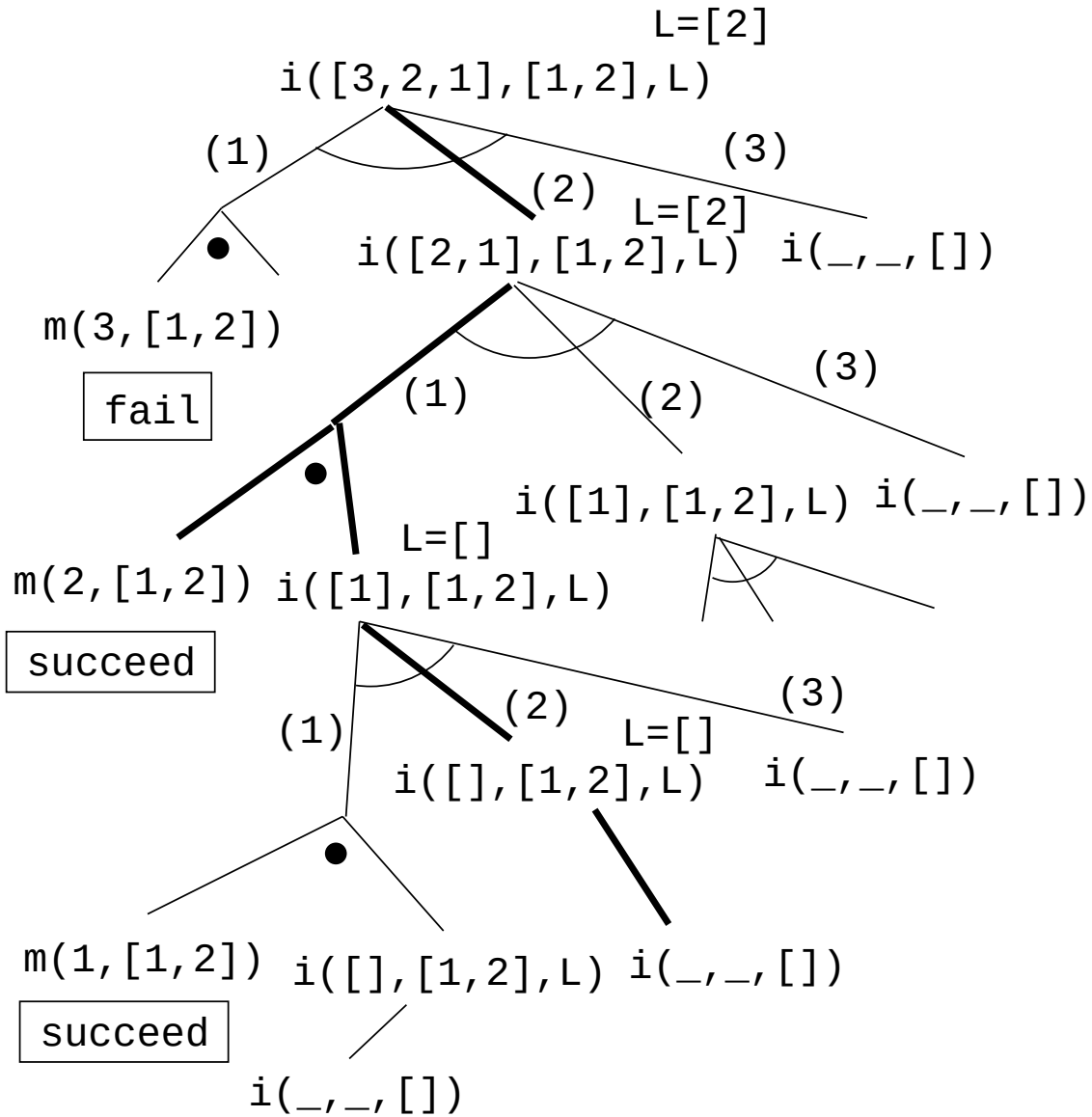

[24]

Red Cuts – Intersection

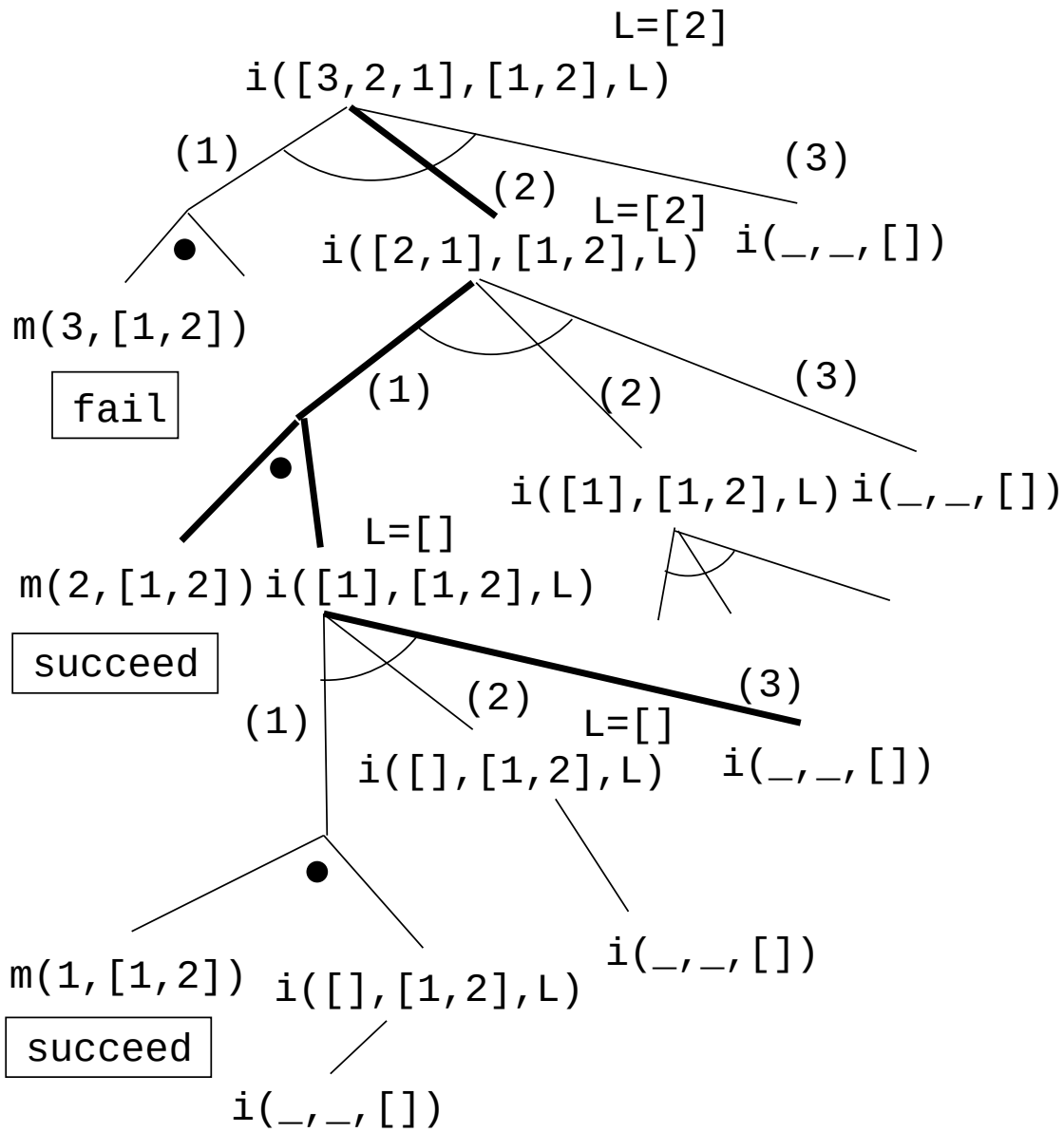

[25]

Red Cuts – Intersection

```
intersect([H|T], L, [H|U]) :-
   member(H, L),
   intersect(T, L, U).
intersect([_|T], L, U) :-
   intersect(T, L, U).
intersect(_,_,[]).

intersect1([H|T], L, [H|U]) :-
   member(H, L), !,
   intersect1(T, L, U).
intersect1([_|T], L, U) :-
   !, intersect1(T, L, U).
intersect1(_,_,[]).
```


[26]

Red Cuts – Intersection

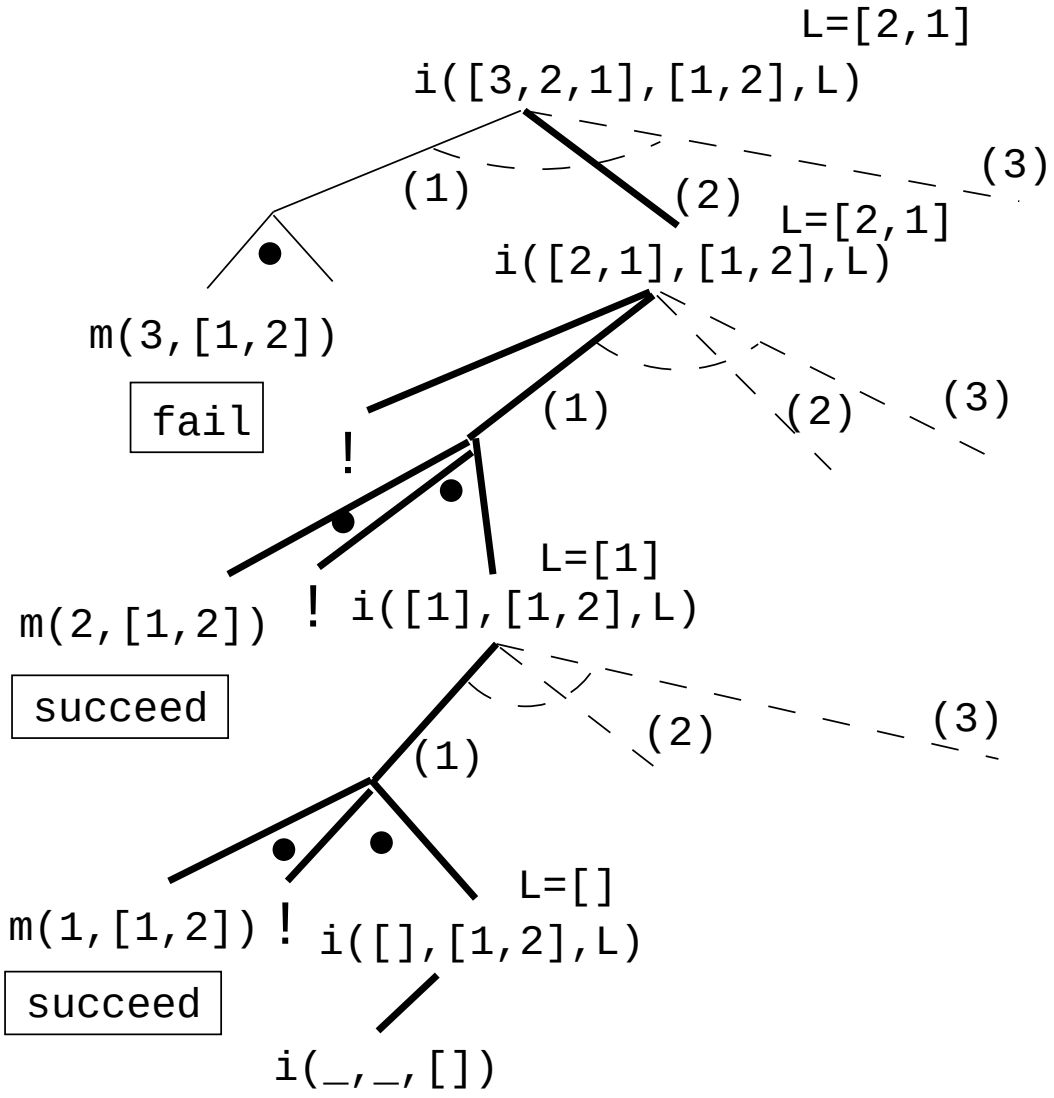

[27]

Blue Cuts

First clause indexing will select the right clause in **constant** time:

```
clause(x(5), ...)  :- ...
clause(y(5), ...)  :- ...
clause(x(5, f), ...)  :- ...
?- clause(x(C, f),...).
```

First clause indexing will select the right clause in **linear** time:

```
clause(W, x(5), ...)  :- ...
clause(W, y(5), ...)  :- ...
clause(W, x(5, f), ...)  :- ...
?- clause(a, x(C, f),...).
```


[28]

Blue Cuts

```
capital(britain, london).
capital(sweden, stockholm).
capital(nz, wellington).
?- capital(sweden, X).
      X = stockholm
?- capital(X, stockholm).
      X = sweden

capital1(britain, london) :- !.
capital1(sweden, stockholm) :- !.
capital1(nz, wellington) :- !.
?- capital1(sweden, X).
      X = stockholm
?- capital1(X, stockholm).
      X = sweden
```

Red Cuts – Once

```
member(H,[H|_]).
member(I, [_|T]) :- member(I, T).

?- member(1,[1,1]), write('x'), fail.
      xx

mem1(H,[H|_]) :- !.
mem1(I, [_|T]) :- mem1(I, T).
?- mem1(1, [1,1]), write('x'), fail.
      x
once(G) :- call(G), !.
one_mem(X, L) :- once(mem(X, L)).
?- one_mem(1,[1,1]), write('x'),fail.
      x
```

Red Cuts – Once

Red cuts prune away logical solutions. A clause with a red cut has no logical reading.

```
?- member(X, [1,2]).
   X = 1 ;
   X = 2 ;
   no

?- one_mem(X, [1,2]).
   X = 1 ;
no
```

Red Cuts – Abs

```
abs2(X, X) :- X >= 0, !.
abs2(X, Y) :- Y is -X.

if_then_else(P,Q,R):-call(P),!,Q.
if_then_else(P,Q,R):-R.

abs4(X, Y) :- if_then_else(X >= 0,
                 Y=X, Y is -X).

?- abs4(-6, X).
      X = 6 ;
      no
?- abs4(6, X).
      X = 6 ;
      no
```


[32]

IF–THEN–ELSE

```
intersect([H|T], L, [H|U]) :-
   member(H, L), !, intersect(T, L, U).
intersect([_|T], L, U) :-
   !, intersect(T, L, U).
intersect(_,_,[]).
```

IF H $\in$ L **THEN**
   compute the inters. of T and L,
   let H be in the resulting list.
ELSEIF the list \= [] **THEN**
   let the resulting list be the
   intersection of T and L.
ELSE
   let the resulting list be [].
ENDIF

IF–THEN–ELSE

```
if_then_else(P,Q,R) :- call(P), !, Q.
if_then_else(P,Q,R) :- R.

intersect2([X|T], L, W) :-
   if_then_else(member(X, L),
         (intersect2(T, L, U), W=[X|U]),
         if_then_else(T \= [],
               intersect2(T, L, W),
               W = [])).
```


[34]

Negation

Open vs. Closed World

How should we handle *negative information*?

Open World Assumption:

If a clause P is not currently asserted then P is neither true nor false.

Closed World Assumption:

If a clause P is not currently asserted then the negation of P is currently asserted.

[36]

Open vs. Closed World

```
striker(dahlin).
striker(thern).
striker(andersson).
```

Open World Assumption:

Dahlin, Thern, and Andersson are strikers, but there may be others we don't know about.

Closed World Assumption:

X is a striker *if and only if* X is one of Dahlin, Thern, and Andersson.

[37]

Negation in Prolog

- Prolog makes the closed world assumption.
- Anything that I do not know and cannot deduce is not true.
- Prolog's version of negation is *negation as failure*.
- `not(G)` means that `G` *is not satisfiable as a Prolog goal*.

```
(1)   not(G) :- call(G),!,fail.
(2)   not(G).
```

```
?- not(member(5, [1,3,5])).
no
?- not(member(5, [1,3,4])).
yes
```


[38]

Prolog Execution – Not

- Some Prolog implementations don't define `not` at all. We then have to give our own implementation:

```
(1)   not(G) :- call(G),!,fail.
(2)   not(G).
```

- Some implementations define `not` as
  - the operator `not`;
  - the operator `\+`;
  - the predicate `not(Goal)`.

  `gprolog` uses `\+`.

Prolog Execution – Not

```
not(P) :- P, !, fail; true.
```

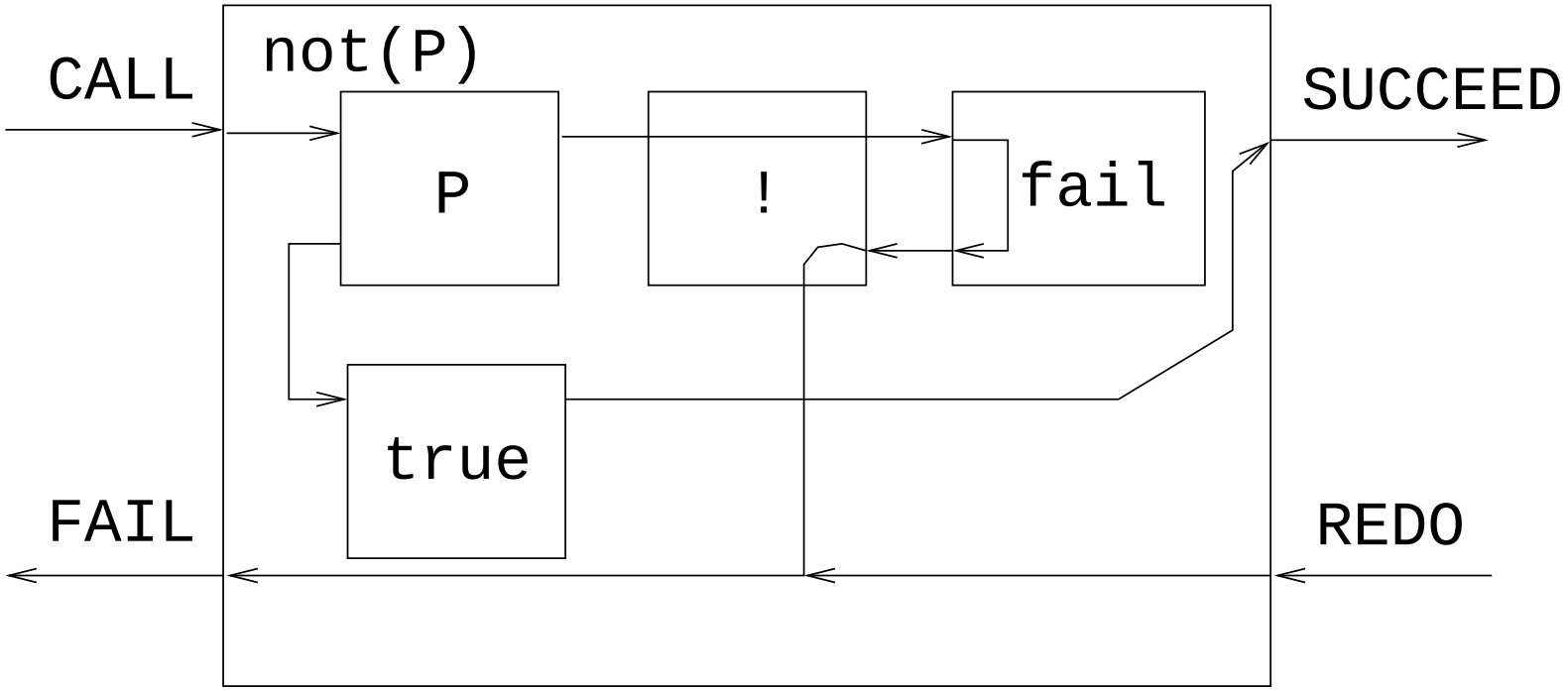

Negation Example – Disjoint

Do the lists X & Y **not** have any elements in common?

```
disjoint(X, Y) :-
      not(member(Z, X),
         member(Z, Y)).

?- disjoint([1,2],[3,2,4]).
      no

?- disjoint([1,2],[3,7,4]).
      yes
```

Prolog Negation Problems

```
man(john).  man(adam).
woman(sue). woman(eve).
married(adam, eve).

married(X) :- married(X, _).
married(X) :- married(_, X).
human(X) :- man(X).
human(X) :- woman(X).

% Who is not married?
?- not married(X).
   false

% Who is not dead?
?- not dead(X).
   true
```


[42]

Prolog Negation Problems

```
man(john).  man(adam).
woman(sue). woman(eve).
married(adam, eve).
married(X) :- married(X, _).
married(X) :- married(_, X).
human(X) :- man(X).
human(X) :- woman(X).

% Who is not married?
?- human(X), not married(X).
   X = john ; X = sue
% Who is not dead?
?- man(X), not dead(X).
   X = john ; X = adam ;
```

Prolog Negation Problems

- If `G` terminates then so does `not G`.
- If `G` does not terminate then `not G` may or may not terminate.

```
married(abraham, sarah).

married(X, Y) :- married(Y, X).

?- not married(abraham,sarah).
   false
?- not married(sarah,abraham).
   non-termination
```

Open World Assumption

We can program the *open world assumption*:

- A query is either *true, false,* or *unknown*.
- A false facts `F` has to be stated explicitly, using `false(F)`.
- If we can't prove that a statement is *true* or *false*, it's *unknown*.

```
% Philip is Charles' father.
father(philip, charles).

% Charles has no children.
false(father(charles, X)).
```

Open World Assumption

```
prove(P) :- call(P), write('** true'), nl,!.

prove(P) :- false(P), write('** false'), nl,!.

prove(P) :-
   not(P), not(false(P)),
   write('*** unknown'), nl, !.
```


[46]

Open World Assumption

```
father(philip, charles).
false(father(charles, X)).

% Is Philip the father of ann?
?- prove(father(philip, ann)).
   ** unknown

% Does Philip have any children?
?- prove(father(philip, X)).
   ** true
   X = charles

% Is Charles the father of Mary?
?- prove(father(charles, mary)).
   ** false
```